OPEN CASE METER

AH-381

※LCD Display

■ Features

- LCD, 10.2mm
- Engineering units available
- Power supply 5V DC±5%
- 200mV~2V Measurement

■ DC Voltage Measurement

Model	Range	Maximum Resolution	Input Impedance	Input Protection
AH-381-11	±199.9mV	100μV	100M	±100V
AH-381-12	±1.999V	1mV	100M	±100V

Accuracy: 0.1% rdg.±1 digit(23° C±5° C)

■ Ordering Code

AH-381-□□

Range { 11 / 12

■ Specifications

Input Configuration:	Single Ended
Input Bias Current:	100PA(Typ.)
Conversion Rate:	2.5/sec
Normal Mode Rejection:	40dB(Typ.)
Zero Stability:	Automatic zero adjustment
Display:	LCD, 10.2mm
Polarity:	A "-" is displayed automatically
Decimal Point:	Settable to any digit position
Overrange Indication:	When input exceeds the maximum display, display 1 or -1 of the most significant digit
Power Supply:	DC5V±5%
Operating Temperature:	0~50° C, 35 to 85%RH
Power Consumption:	3mA(Max.)
Dimensions:	29.5(H)・65(W)・16.5(D)mm
Weight:	Approx. 17g

■ Dimensions

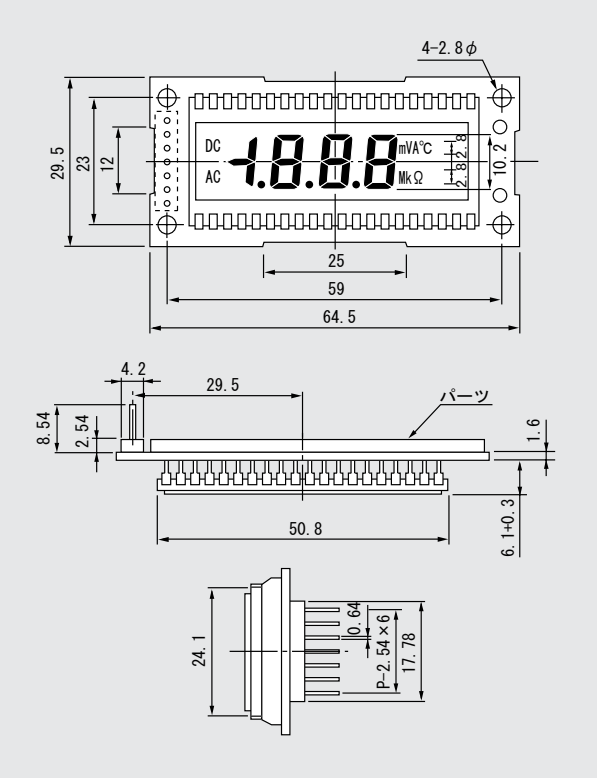
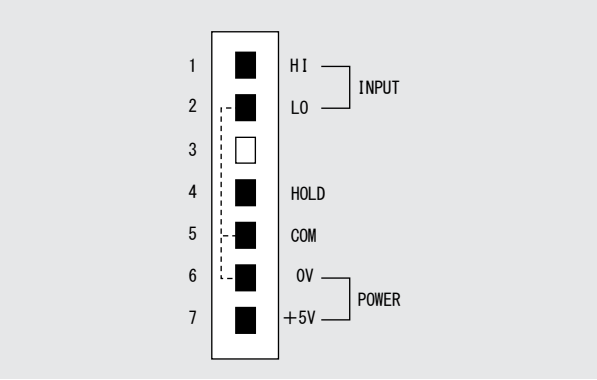
■ Connection Diagram